GEO PRODUCTS, LLC

INSTALLATION GUIDE: Slopes & Channels

ENVIROGRID® GEOCELL

MANUFACTURING

ENVIROGRID® GEOCELL

SINCE 1990

GEO PRODUCTS, LLC

12626 N. HOUSTON ROSSLYN RD.
HOUSON, TX 77086

281.820.5493

WWW.GEOPRODUCTS.ORG

INSTALLATION GUIDE:
SLOPE EROSION & CHANNELS

CONTENT

ENVIROGRID® OVERVIEW: APPLICATIONS & INFILL

EnviroGrid® placed on slopes in excess of 2:1 will hold your fill material in place. The cell walls slow the flow of water down the slope or in areas affected by wave action, reducing the formation of rills, a major cause of soil erosion. Depending on the site specific application, EnviroGrid® can be filled with angular rock, concrete or native soils.

MATERIAL INFILL SELECTION

- TOPSOIL & VEGETATION
  Steep slopes, berms, levees, chutes, aprons, spillways
- SAND & GRANULAR
  Suitable on gradual slopes
- AGGREGATE
  Channels, slopes, except for steep grades, moderate sheet flow
- CONCRETE
  Bridges, severe slopes, high flow rate channels, spillways and chutes.
- STRUCTURAL/GROWTH*
  Vegetated slopes that experience traffic loads

**EnviroGrid® Structural Growth Infill material should be composed of an aggregate and growing medium blend meeting certain requirements.*

CELL APERTURES

SLOPE CONDITIONS & CELL DEPTH

Slope Degree																
0.5 to 1	60°	6"	6"	6"	6"	6"	6"	6"	6"	6"	6"	6"	6"	6"	6"	EGA20
1 to 1.5	55°	6"	6"	6"	6"	6"	6"	6"	6"	4"	4"	4"	4"	4"	4"	
1 to 1	45°	6"	6"	6"	6"	6"	6"	6"	6"	6"	6"	6"	4"	4"	4"	EGA30
1.5 to 1	35°	6"	6"	6"	6"	6"	4"	4"	4"	4"	4"	4"	3"	3"	3"	
2 to 1	25°	6"	4"	4"	4"	4"	4"	4"	3"	3"	3"	3"	3"	3"	3"	
3 to 1	20°	4"	4"	4"	4"	4"	4"	3"	3"	3"	3"	3"	3"	3"	3"	
4 to 1	15°	6"	6"	4"	4"	4"	4"	4"	4"	3"	3"	3"	3"	3"	3"	EGA40
5 to 1	10°	6"	4"	4"	4"	4"	4"	4"	3"	3"	3"	3"	3"	3"	3"	
		14° 16°		18° 20°		22°	24° 26°		28° 30°		32° 34°		36° 38°		40°	
		Wet Clay, Water-filled Sand		*Silty Clay*		*Clay*	*Mixture of Inorganic Silt & Clay*		*Silty Sand*		*Crushed Stone, Dry Sand*		*Decomposed Granite, Limestone*		*Wet Sand*	

Lowest Angle of Internal Friction ϕ for infill material

*Metric Conversions: 6" = 150mm, 4" = 100mm, 3" = 75mm

Channel Fill Material

The EnviroGrid® GeoCell takes the concept of two dimensions, length and width, and expands it to a third; depth. This vertical and horizontal confinement of the entire depth of the base layer not only provides maximum stability, but has major implications on cost effectiveness and long-term performance of the project.

Concrete Infill & Recommended Depths

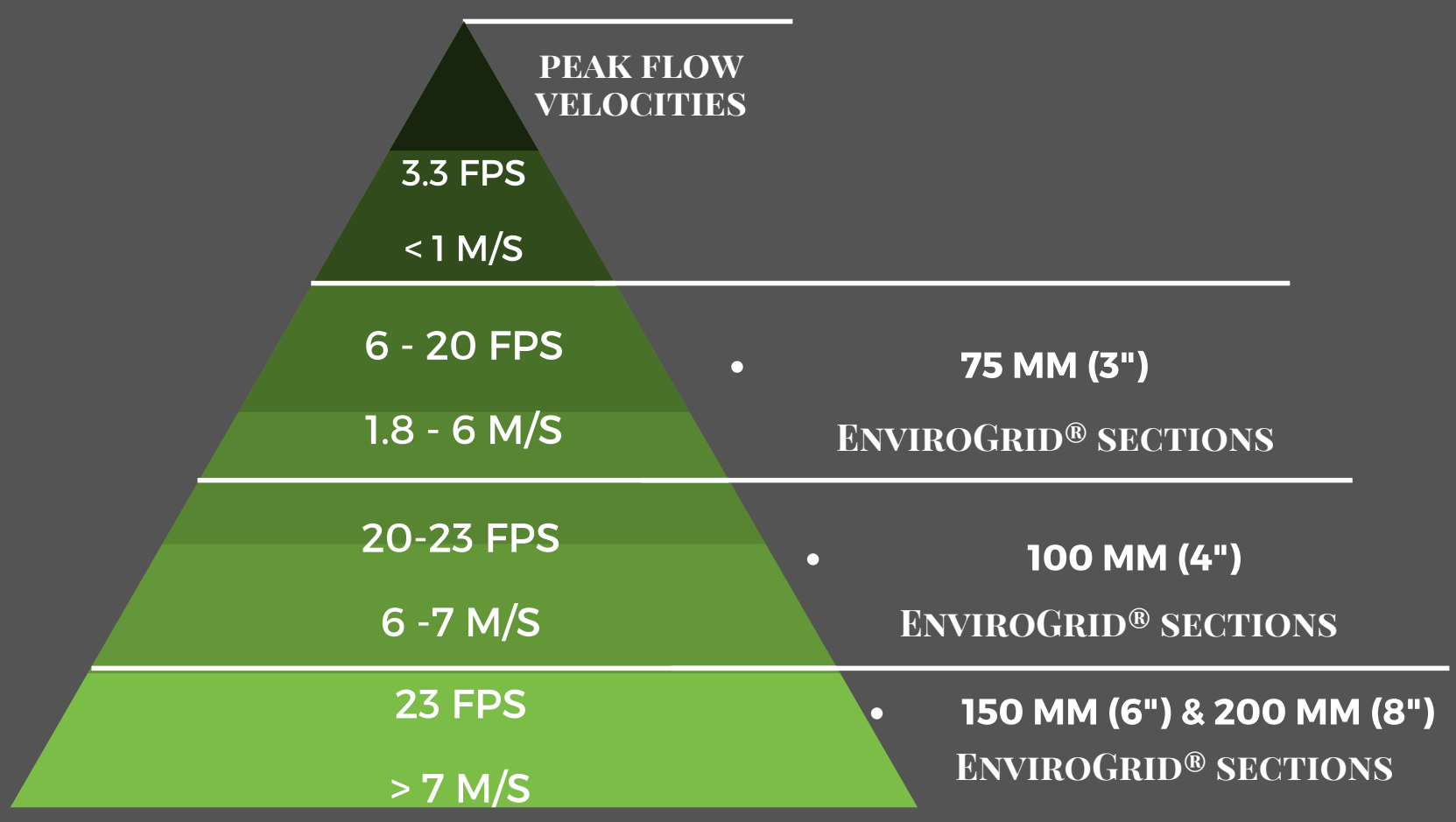

Stone Infill & Recommended Sizes

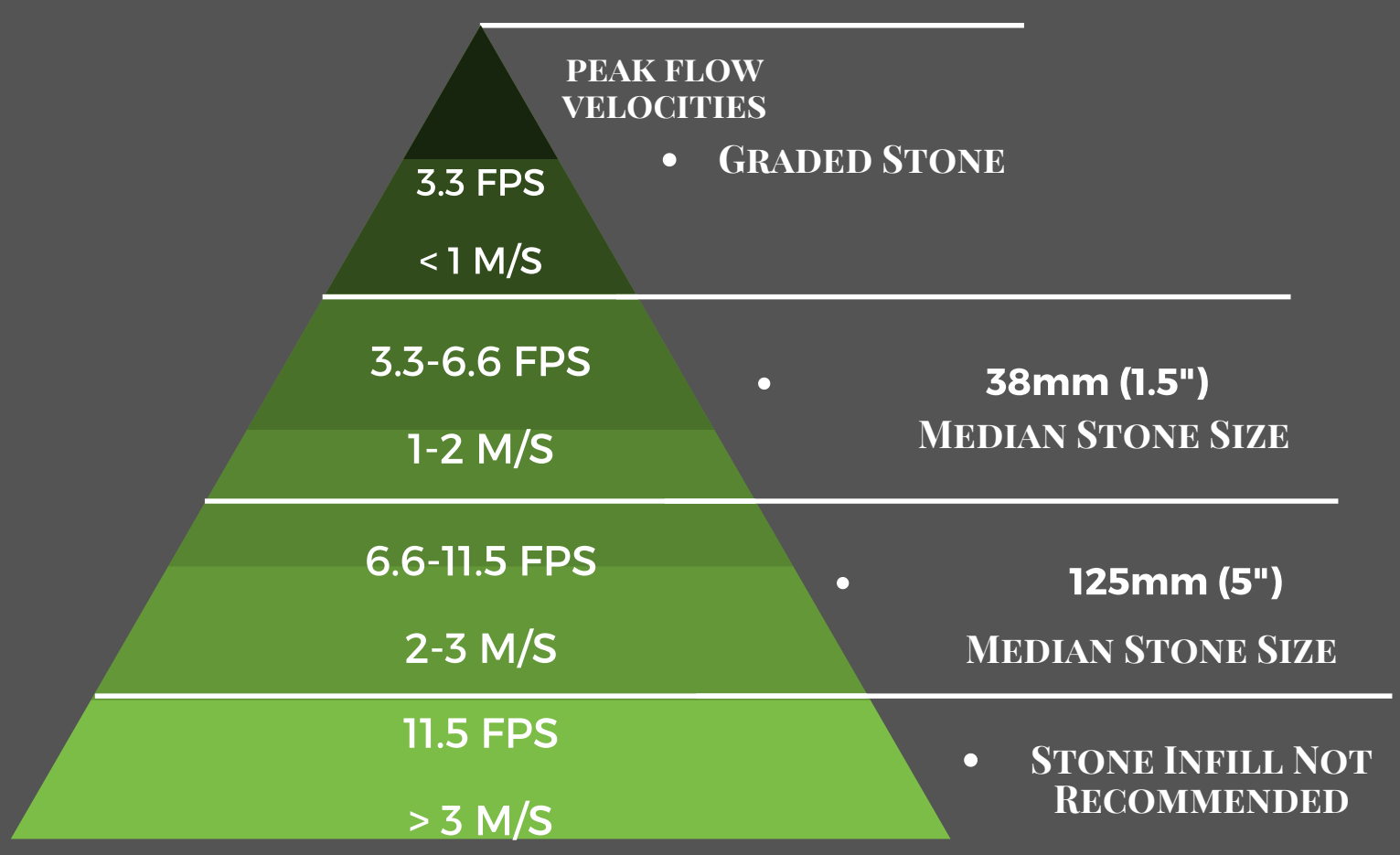

Vegetative Infill

Peak flow velocity with EnviroGrid®

- **20 FPS**

  6 M/S

ACCESSORIES:
PANEL CONNECTION

Adjacent sections of EnviroGrid® must be joined to keep them from moving when the infill material is placed. Depending on various factors of the job, there are two avenues of connecting panels that can be taken.

EnviroLock

The EnviroLock is a one-piece, high strength nylon mechanical device that can join up to 6" of the joints. One EnviroLock is used per cell joint. They do not require any additional equipment to install.

STAPLES

The use of pneumatic stapler and staples is another method, primarily used for larger jobs. The staples are attached through each set of adjoining cells. This requires a small compressor (100psi) and generator. The number of recommended staples per various cell heights are listed below.

Number of staples required

cell height	# staples/joint
3" (75mm)	3
4" (100mm)	4
6" (150mm)	5
8" (200mm)	5

ACCESSORIES:
ANCHORING

Proper Anchoring of the EnviroGrid® to a slope is critical to how well the product performs. Anchors should be left in place after installation. The number of anchors is determined by:

- Sub-grade density
- Infill Type & Weight
- Slope Length
- Slope Grade
- Environmental Conditions (Snow)
- Angle of Internal Friction (ϕ) of Fill Material
- Angle of Internal friction (ϕ) of slope soil
- Height of EnviroGrid
- Presence of Geomembrane Liner / Geotextile
- Safety Factor

EnviroClip

The EnviroClip is the preferred type of pin used to stake the EnviroGrid® to a slope. The anchoring method can be used when geomembrane liner is not present and if the soil has adequate strength to retain the pins. If no engineer recommendations are provided, a typical installation estimate is to use 1 EnviroClip per square yard. Contact Geo Products or engineer to verify design requirements.

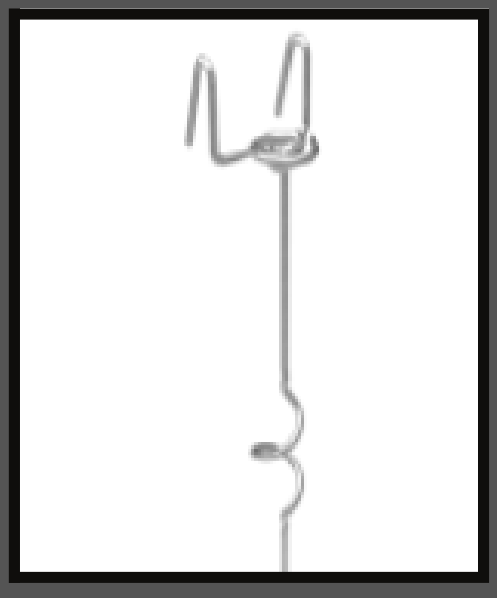

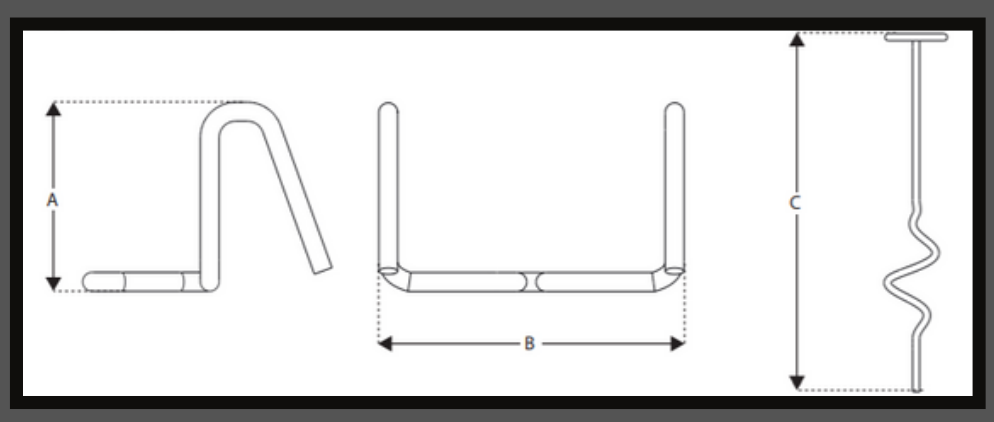

DIMENSION	LENGTH (MM)
A	40
B	60
C	202

Galvanized 8 gauge steel per ASTM-A 1023

INSTALLATION

EnviroClip step by step installation is shown to the right.

Below are the specifications for the tools needed:

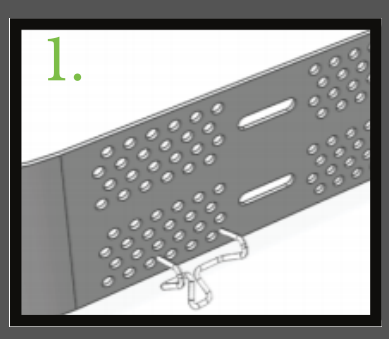

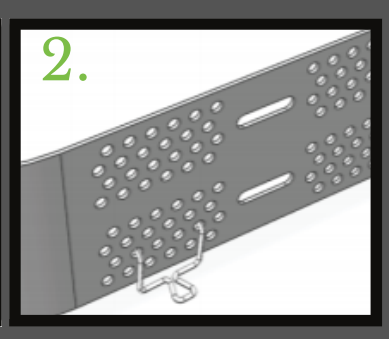

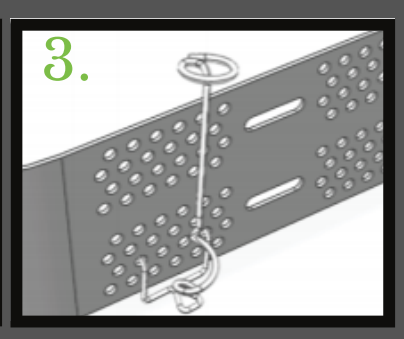

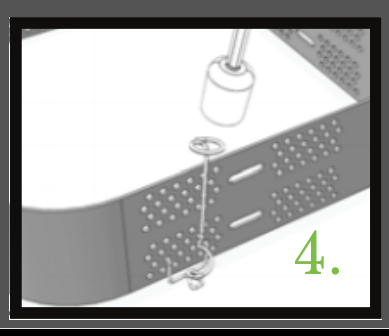

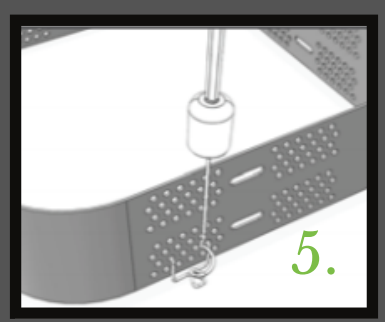

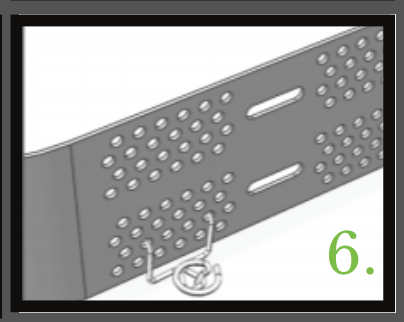

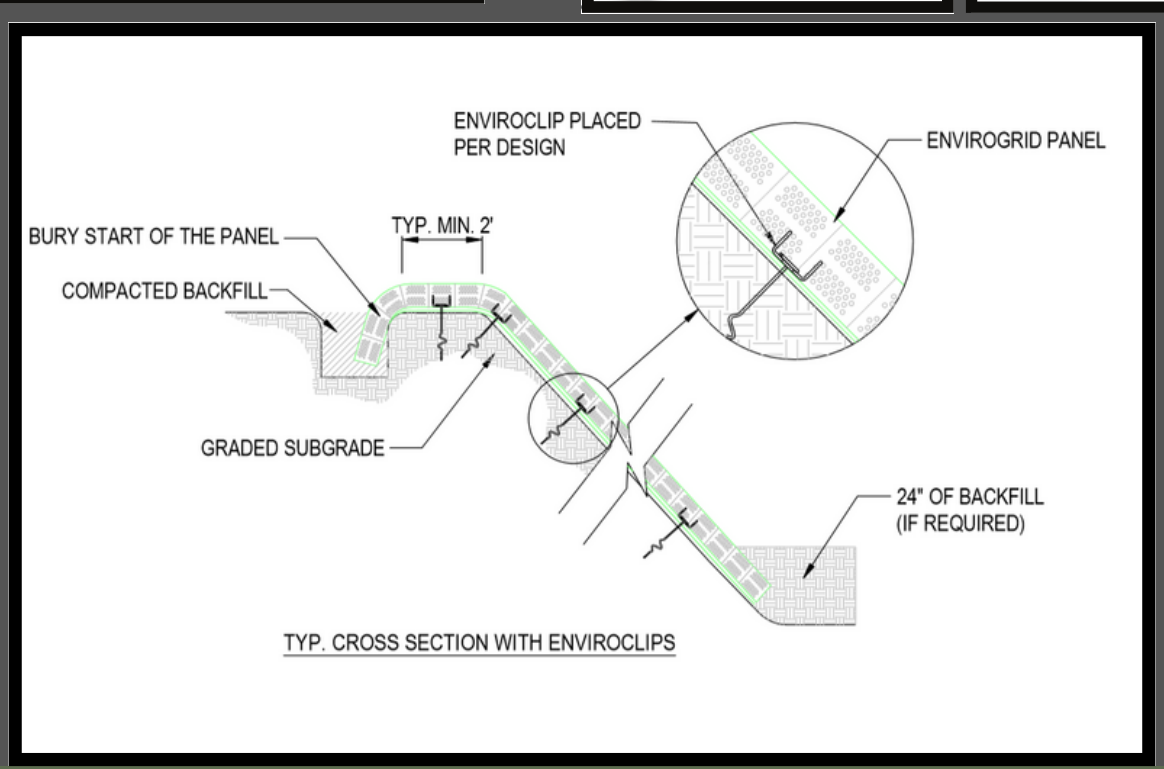

ACCESSORIES:
ANCHORING

Tendons

Tendons are employed on steep slopes in need of additional support or where the use of EnviroClips is prohibited (rock base or geomembrane liner). The tendons consist of high-strength polyester webbing or cord, and are used due to their strength, durability, and resistance to creep. The number of tendons required are determined by a project engineer.

Load Displacement Washer

The use of these restraining devices helps to transfer the load from EnviroGrid® to the tendons. The flat washers are hot-dipped galvanized steel, making them 10 times as corrosion resistant as zinc-plated washers.

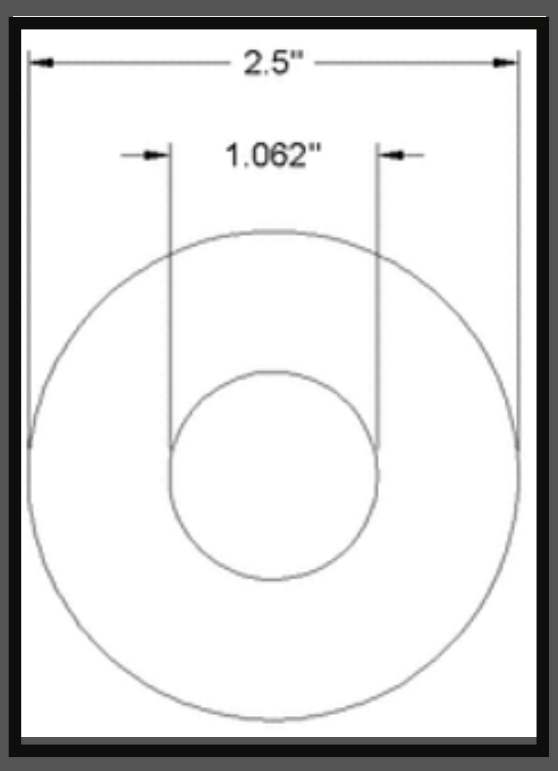

USS STANDARDS* | ASME B18.21.1 | ROHS COMPIANT
ID: 1.062"
OD: 2.500"
THICKNESS: 0.136"-0.192"
FOR SCREW SIZE: 1"

*USS washers generally have a larger ID and OD than SAE washers.

INSTALLATION:
STEP BY STEP

Overview

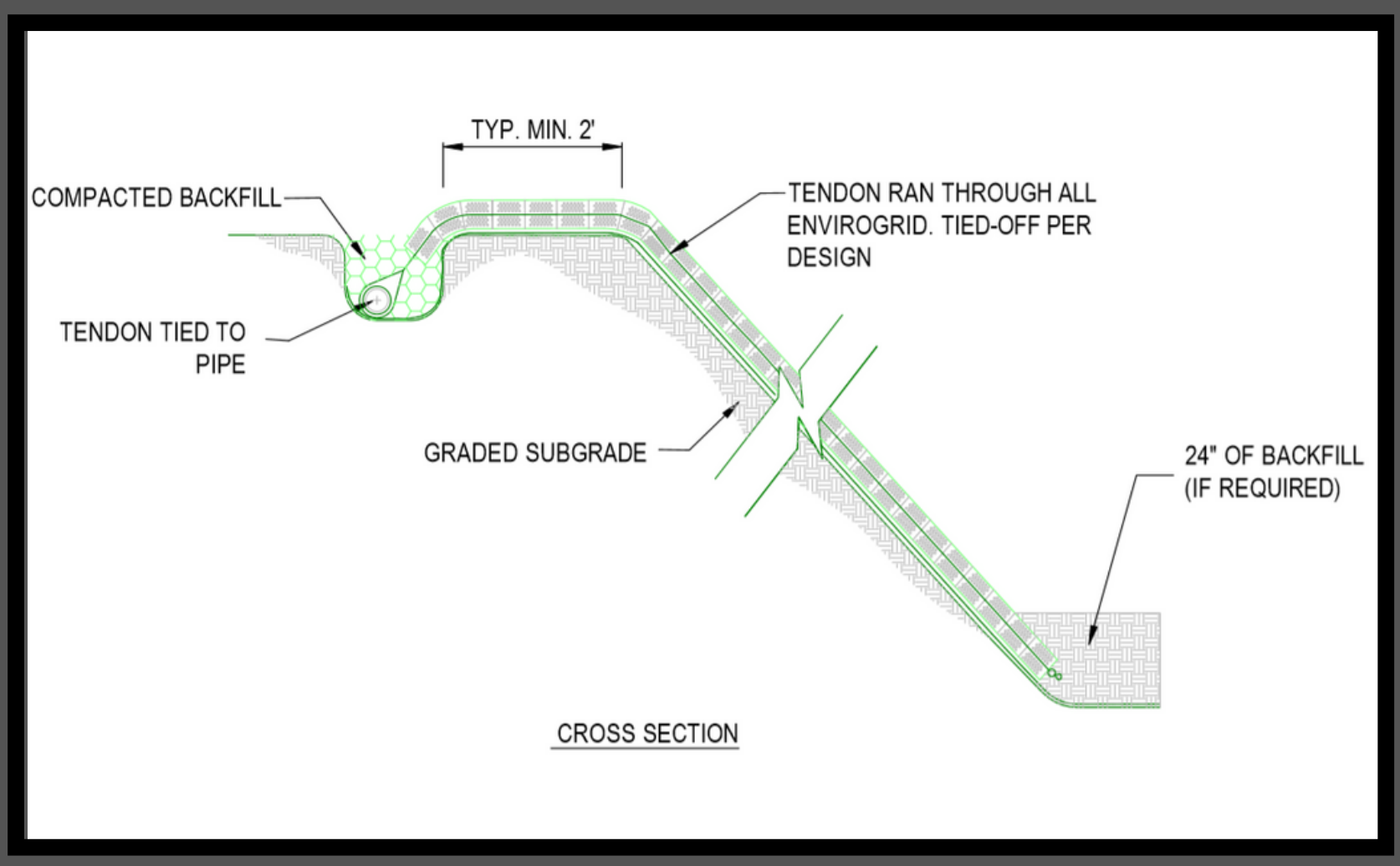

1. Prepare Site & Measurements

Remove all vegetative cover, debris, and unacceptable soils from the area the EnviroGrid® will be laid and replace with acceptable materials. Complete any earthwork such as trenches.
If geotextile is required, installation should be accomplished in accordance with the manufacturer's recommendations.

EnviroGrid® should always be placed beyond the crest of the slope to prevent surface water from undermining the panels. A string or chalk line may be used to align staking locations. Do not expand the panels at this time.

Measure the total length down the slope of the area to be covered and calculate the number of cells required to cover entire length using the following chart.

Expanded Cell and Panel Sizes				
All Standard Panels are 2.56 m(8.4') Wide and 29 Cells Long				
Product	Cells per Width	Cell Width	Cell Length	Panel Length
EGA20	10	0.26m (0.85')	0.22m (0.74')	6.52 m (21.4')
EGA30	8	0.32m (1.05')	0.29m (0.95')	8.35 m (27.4')
EGA40	5	0.51m (1.67')	0.48m (1.56')	13.72 m (45')

INSTALLATION:
STEP BY STEP

2. Anchor Trench & Measure Panels

The upper edge of the EnviroGrid® should be buried in an anchor trench to prevent flow underneath, serving to anchor the EnviroGrid® to the top of the slope. This supporting structure may be the length of high-strength PVC pipe, a concrete beam, or a set of concrete blocks placed inside of the anchor trench.

The following equation can be used to calculate the required length and height of the trench to resist sliding force.

$$\left((d-a)a + \frac{(d-a)^2}{2}\right) * y = \text{NSF} * \text{FS}$$

d = Depth of Trench
a = Diameter of Anchoring Pipe
y = Unit Weight of Back-Fill Material (in Trench)

NSF ° = Net Sliding Force per M
FS = Factor of Safety (with respect to sliding)

Measure and cut tendons to desired length, which will include slope length, horizontal component on top of slope, and depth of anchor trench. Add approximately 15% for tying around restraint pins and anchor pipe. A single tendon should run the entire length of the slope, even if multiple panels are required.

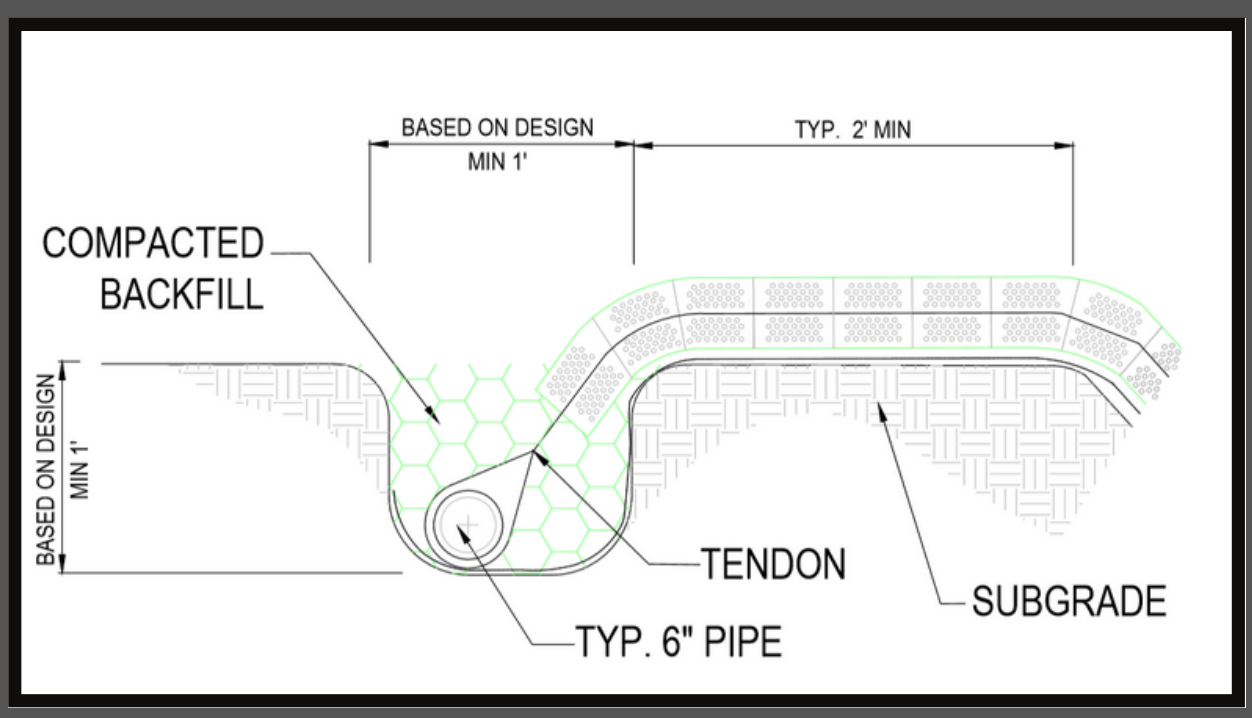

INSTALLATION:
STEP BY STEP

3. Expand Panels

Tie the tendons to a supporting structure at the crest of the slope. Thread tendons through the slots in the un-expanded EnviroGrid® sections. The washers are typically placed every 6 cells. Check design to ensure proper spacing is being used.

Expand the panels down the slope. The sections should be stretched past the design length then allowed to settle back to the desired length.

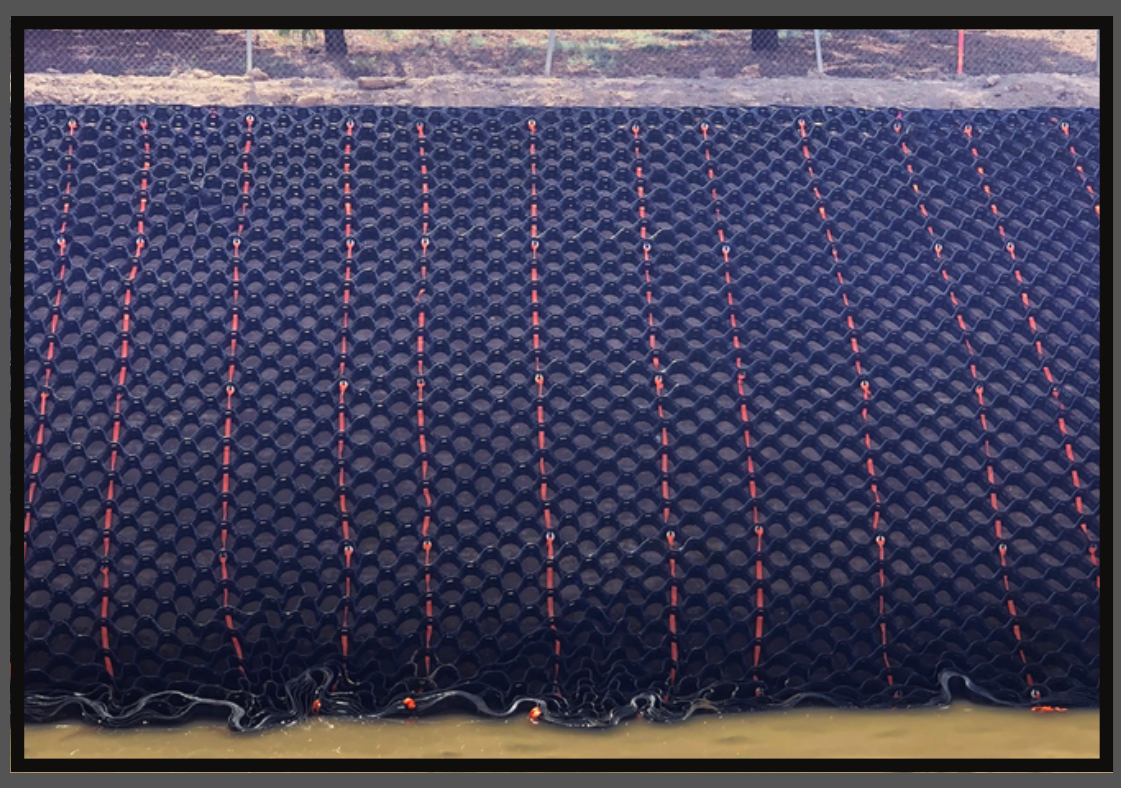

4. Tie Washers & Connect Panels

Tie the tendons to a load displacement washer or the cell wall on the downhill side of the last cell. The washers can be attached prior to or after expanding the panels down the slope. The washers should be placed every 6 cells down the slope.

Adjoining EnviroGrid® sections must be flush with each other. Overlap the sides of the panels of each section and secure using a accessory required by job application.

INSTALLATION:
STEP BY STEP

5. Fill Panels & Compact

When EnviroGrid® has been laid in place, the system should be filled using specified material. The drop height should be limited to no more than 2 feet. Infill should be placed from the top of the slope to the base, using a front-end loader, backhoe, bucket excavator, or conveyor.

When using sand, granular, or topsoil fills, overfill the EnviroGrid® sections by 1" (25mm) to 2" (50mm) to allow for settling and compaction.

COMPACTION METHODS PER INFILL MATERIAL:

Sand and Granular Fills: Blade compacted
Topsoil Fills: Loader, Backhoe Bucket, Tamper Plate
Concrete Fills: Manually raked and machine Finished

LEGAL NOTICE

GEO PRODUCTS, LLC

provides this information only as an accommodation to our customers. No warranty or other representation regarding the suitability of the application procedures is made to the fact that each installation has specific requirements that may not have been considered in this generalized procedure overview. Geo Products, LLC makes no warranties or representations regarding the suitability of its EnviroGrid® for specific uses or applications. User is strongly urged to consult its engineer and/or architect prior to purchase and installation of materials set out herein.